DATA SHEET

EYP-BAL-0653-01000-1510-CMT02-0000

Revision 0.93

08.08.2017

MULTI MODE LASER DIODES
Broad Area Laser

General Product Information

Product	Application
653 nm Broad Area Laser	Sensing
mounted on C-Mount	Medical



Absolute Maximum Ratings

Parameter	Symbol	Unit	min	typ	max	Measurement Conditions / Comments
Storage Temperature	T_S	°C	-40		85	non condensing
Operational Temperature at Case	T_C	°C	-20		30	non condensing
Forward Current	I_F	A			1.8	Stress in excess of one of the absolute maximum ratings can cause permanent damage to the device. Do not exceed the max. output power or max. forward current, whichever occurs first.
Reverse Voltage	V_R	V			2	
Output Power	P_{opt}	W			1.2	

Recommended Operational Conditions

Parameter	Symbol	Unit	min	typ	max	Measurement Conditions / Comments
Operational Temperature at Case	T_C	°C	10		20	non condensing
Forward Current	I_F	A			1.6	
Output Power	P_{opt}	W			1.0	

Characteristics at 20° C at Begin Of Life

Parameter	Symbol	Unit	min	typ	max	Measurement Conditions / Comments
Center Wavelength	λ_C	nm	648		658	see image on page 2
Spectral Width (FWHM)	$\Delta\lambda$	nm		2		
Temperature Coefficient of Wavelength	$d\lambda / dT$	nm / K		0.3		
Slope Efficiency	η_d	W/A		0.7		
Threshold Current	I_{th}	A		0.75	0.85	
Operating Current @ Popt = 1.0 W	I_{op}	A			1.6	
Operating Voltage @ Popt = 1.0 W	V_{op}	V		2.5		

Distributor
amsTECHNOLOGIES
where technologies meet solutions
info@amstechnologies.com
www.amstechnologies-webshop.com
Contact us

EYP-BAL-0653-01000-1510-CMT02-0000

Revision 0.93

08.08.2017

MULTI MODE LASER DIODES
Broad Area Laser

Characteristics at 20° C at Begin Of Life cont'd

Parameter	Symbol	Unit	min	typ	max	Measurement Conditions / Comments
Stripe Width	W_S	µm		100		
Cavity Length	L	µm		1500		
Divergence parallel (FWHM)	$\Theta_{\parallel}$	°		8		beam divergence parallel to junction plane
Divergence perpendicular (FWHM)	$\Theta_{\perp}$	°		30		beam divergence perpendicular to junction plane
Spectral Mode (longitudinal)				multimode		
Polarization				TE		polarization parallel to junction plane

Typical Measurement Results

Spectrum

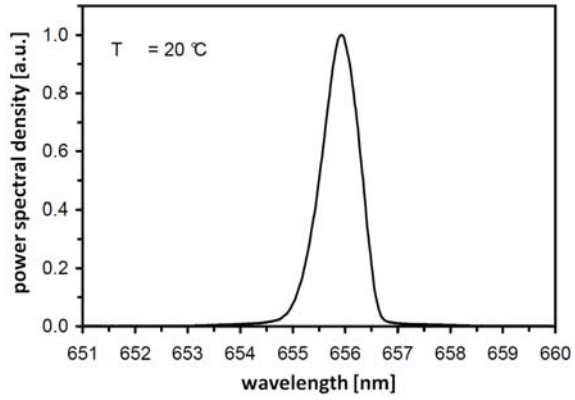

Performance figures, data and any illustrative material provided in this specification are typical and must be specifically confirmed in writing by eagleyard Photonics before they become applicable to any particular order or contract. In accordance with the eagleyard Photonics policy of continuous improvement specifications may change without notice.

© All rights reserved by eagleyard Photonics GmbH. This data sheet will be electronically administered and is subject to change without notice. Uncontrolled copy when printed.

EYP-BAL-0653-01000-1510-CMT02-0000

Revision 0.93

08.08.2017

MULTI MODE LASER DIODES
Broad Area Laser

Package Dimensions

Parameter	Symbol	Unit	min	typ	max	Measurement Conditions / Comments
Height of Emission Plane	h_{EP}	mm	7.05	7.20	7.35	
Excentricity of Emission Center	R	mm		2.18		

Package Pinout

Mounting Wire	Cathode (-)
Housing	Anode (+)

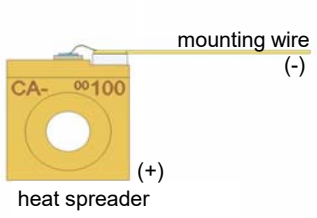

Package Drawings

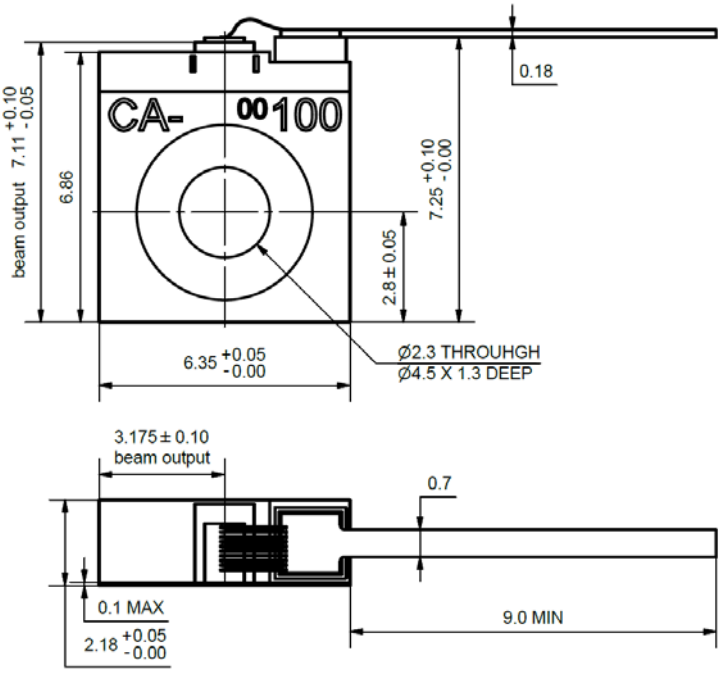

AIZ-16-0414-1638

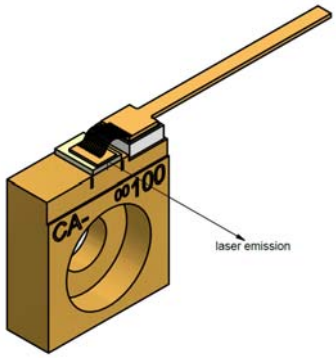

© All rights reserved by eagleyard Photonics GmbH. This data sheet will be electronically administered and is subject to change without notice. Uncontrolled copy when printed.

EYP-BAL-0653-01000-1510-CMT02-0000

Revision 0.93

08.08.2017

MULTI MODE LASER DIODES
Broad Area Laser

Unpacking, Installation and Laser Safety

Unpacking the laser diodes should only be done at electrostatic safe workstations (EPA). Though protection against electro static discharge (ESD) is implemented in the laser package, charges may occur at surfaces. Please store this product in its original package at a dry, clean place until final use. During device installation, ESD protection has to be maintained.

The BAL diode type is known to be sensitive against thermal stress. Operating at moderate temperatures on propper heat sinks willl contribute to a long lifetime of the diode.

The laser emission from this diode is close to the invisible infrared region of the electromagnetic spectrum. Avoid direct and/or indirect exposure to the free running beam. Collimating the free running beam with optics as common in optical instruments will increase threat to the human eye.

Each laser diode will come with an individual test protocol verifying the parameters given in this document.

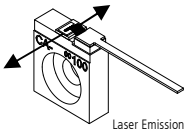





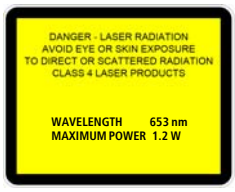

IEC 80825-1





Complies with 21 CFR 1040.10 and 1040.40

Distributor
amsTECHNOLOGIES
where technologies meet solutions
info@amstechnologies.com
www.amstechnologies-webshop.com
Contact us

© All rights reserved by eagleyard Photonics GmbH. This data sheet will be electronically administered and is subject to change without notice. Uncontrolled copy when printed.

DATA SHEET

EYP-BAL-0670-00001-1510-SOT23-0010

BROAD AREA LASER

GaAs Semiconductor Laser Diode
Single Emitter Structure



General Product Information

Product	Application
670 nm Broad Area Laser	Sensing
for Pulse Mode Operation	
sealed TO Housing	



Absolute Maximum Ratings

	Symbol	Unit	min	typ	max	
Storage Temperature	T_S	°C	-40		85	Every condition of the Absolute Maximum Ratings has to be kept during operation
Operational Temperature at Case	T_C	°C	-35		80	
Peak Current	$I_{F\ Peak}$	A			3.0	see Pulse Mode Conditions, @ 25° C
Reverse Voltage	V_R	V			2	
Peak Output Power	$P_{opt\ Peak}$	W			2.4	see Pulse Mode Conditions
Forward Voltage at Peak	V_F	V			2.7	see Pulse Mode Conditions

Recommended Operational Conditions (Pulse Mode)

	Symbol	Unit	min	typ	max	Measurement Conditions / Comments
Operational Temperature at Case	T_C	°C	15		40	
Forward Current	$I_{F\ Peak}$	A			2.4	see Pulse Mode Conditions, @ 25° C
Output Power	$P_{opt\ Peak}$	W		1.8		see Pulse Mode Conditions

Characteristics at T_{amb} 25 °C, Pulse Mode, Begin Of Life

Parameter	Symbol	Unit	min	typ	max	Measurement Conditions / Comments
Center Wavelength	λ_C	nm	660	670	680	see Pulse Mode Conditions
Spectral Width (FWHM)	$\Delta\lambda$	nm		4	6	
Temperature Coefficient of Wavelength	$d\lambda / dT$	nm / K		0.18		
Peak Output Power @ I_F = 2.4 A	$P_{opt\ Peak}$	W		1.8		see Pulse Mode Conditions
Threshold Current	I_{th}	A		0.5		
Differential Series Resistance	R_S	Ω		0.1		
Slope Efficiency	η	W/A		1.0		

Distributor
amsTECHNOLOGIES
where technologies meet solutions
info@amstechnologies.com
www.amstechnologies-webshop.com
Contact us

BROAD AREA LASER

GaAs Semiconductor Laser Diode
Single Emitter Structure



Characteristics at T_{amb} 25 °C, Pulse Mode, Begin Of Life

Parameter	Symbol	Unit	min	typ	max	Measurement Conditions / Comments
Cavity Length	L	µm		1500		
Stripe width	Ws	µm		100		
Divergence parallel (FWHM)	$\Theta_{\parallel}$	°		10		
Divergence perpendicular (FWHM)	$\Theta_{\perp}$	°		30		
Polarization				TE		E field parallel to Pin 2 - Pin 3 - plane
Spectral Mode (longitudinal)				Multi Mode		

Pulse Mode Conditions

Parameter	Symbol	Unit	min	typ	max	Measurement Conditions / Comments
Pulse Length	t_p	µs		10		
Pulse Repetition Rate	RR_p	s^{-1}		5000		

© All rights reserved by eagleyard Photonics GmbH. This data sheet will be electronically administered and is subject to change without notice. Uncontrolled copy when printed.

EYP-BAL-0670-00001-1510-SOT23-0010

BROAD AREA LASER

GaAs Semiconductor Laser Diode
Single Emitter Structure

RWE/RWL | BAL | DFB/DBR | TPL/TPA

Package Dimensions

Parameter	Symbol	Unit	min	typ	max	Measurement Conditions / Comments
Height of Emission Plane	d_{EP}	mm		3.65		reference plane A: top side of TO header
Excentricity of Emission Center	R	mm			0.12	reference B: center of outer diameter of header
Pin Length	l	mm		14.0		

Package Drawings

PIN 1 (case) Laser Anode (+)
PIN 2 (not connected)
PIN 3 Laser Cathode (-)

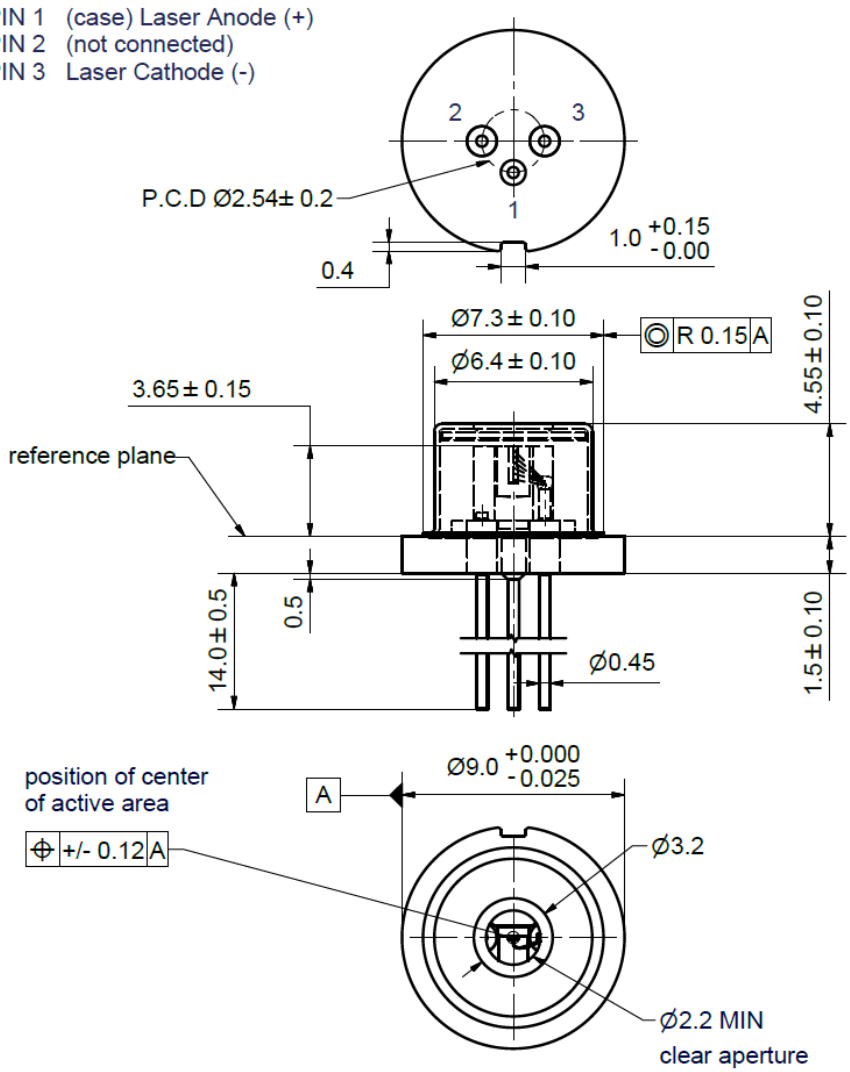

Finish of the pins: Ni-EP1 ~ 8µm + Au-P 0.8 µm min

Z14-0000-SOT23-BAL-0001

Pinout

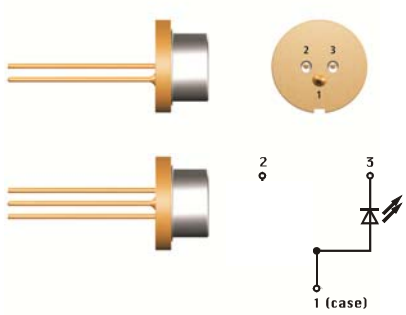

© All rights reserved by eagleyard Photonics GmbH. This data sheet will be electronically administered and is subject to change without notice. Uncontrolled copy when printed.

EYP-BAL-0670-00001-1510-SOT23-0010

BROAD AREA LASER

GaAs Semiconductor Laser Diode
Single Emitter Structure



Typical Measurement Results

Spectrum

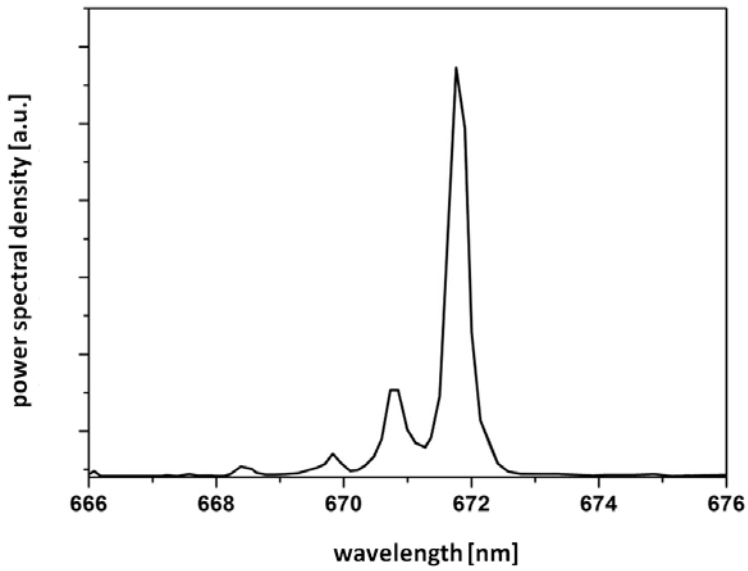

Performance figures, data and any illustrative material provided in this specification are typical and must be specifically confirmed in writing by eagleyard Photonics before they become applicable to any particular order or contract. In accordance with the eagleyard Photonics policy of continuous improvement specifications may change without notice.

Unpacking, Installation and Laser Safety

Unpacking the laser diodes should only be done at electrostatic safe workstations (EPA). Though protection against electro static discharge (ESD) is implemented in the laser package, charges may occur at surfaces. Please store this product in its original package at a dry, clean place until final use. During device installation, ESD protection has to be maintained.

The BAL diode type is known to be sensitive against thermal stress. Operating at moderate temperatures on propper heat sinks willl contribute to a long lifetime of the diode.

The laser emission from this diode is close to the invisible infrared region of the electromagnetic spectrum. Avoid direct and/or indirect exposure to the free running beam. Collimating the free running beam with optics as common in optical instruments will increase threat to the human eye.

Each laser diode will come with an individual test protocol verifying the parameters given in this document.

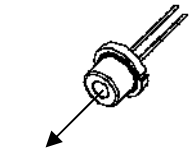





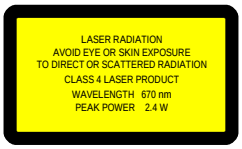

IEC 60825-1





Complies with 21 CFR 1040.10 and 1040.40

Distributor
amsTECHNOLOGIES
where technologies meet solutions
info@amstechnologies.com
www.amstechnologies-webshop.com
Contact us

DATA SHEET

EYP-BAL-0670-00004-1510-SOT23-0010

Revision 0.70

18.01.2017

MULTI MODE LASER DIODES
Broad Area Laser

General Product Information

Product	Application
670 nm Broad Area Laser	Sensing
for Pulse Mode Operation	
sealed TO Housing	



Absolute Maximum Ratings

Parameter	Symbol	Unit	min	typ	max	Measurement Conditions / Comments
Storage Temperature	T_S	°C	-40		85	Every condition of the Absolute Maximum Ratings has to be kept during operation
Operational Temperature at Case	T_C	°C	-20		70	
Peak Current	$I_{F\ Peak}$	A			7	see Pulse Mode Conditions
Reverse Voltage	V_R	V			2	
Peak Output Power	$P_{opt\ Peak}$	W			5	see Pulse Mode Conditions
Forward Voltage at Peak	V_F	V			4	see Pulse Mode Conditions

Recommended Operational Conditions

Parameter	Symbol	Unit	min	typ	max	Measurement Conditions / Comments
Operational Temperature at Case	T_C	°C	15		40	
Forward Current	$I_{F\ Peak}$	A			6	see Pulse Mode Conditions
Output Power	$P_{opt\ Peak}$	W		4		see Pulse Mode Conditions

Characteristics at 25° C at Begin Of Life

Parameter	Symbol	Unit	min	typ	max	Measurement Conditions / Comments
Center Wavelength	λ_C	nm	650	670	690	see Pulse Mode Conditions
Spectral Width (FWHM)	$\Delta\lambda$	nm		5		
Temperature Coefficient of Wavelength	$d\lambda / dT$	nm / K		0.3		
Peak Output Power @ I_F = 6 A	$P_{opt\ Peak}$	W		4		see Pulse Mode Conditions
Threshold Current	I_{th}	A		0.5		
Differential Series Resistance	R_S	Ω		0.1		
Cavity Length	L	µm		1500		
Stripe width	Ws	µm		100		

Distributor
amsTECHNOLOGIES
where technologies meet solutions
info@amstechnologies.com
www.amstechnologies-webshop.com
Contact us

EYP-BAL-0670-00004-1510-SOT23-0010

Revision 0.70

18.01.2017

MULTI MODE LASER DIODES
Broad Area Laser

Characteristics at 25° C at Begin Of Life cont'd

Parameter	Symbol	Unit	min	typ	max	Measurement Conditions / Comments
Divergence parallel (FWHM)	$\Theta_{\parallel}$	°	5	10	13	
Divergence perpendicular (FWHM)	$\Theta_{\perp}$	°	25	30	35	
Polarization				TE		E field parallel to Pin 2 - Pin 3 - plane
Spectral Mode (longitudinal)				Multi Mode		

Pulse Mode Conditions

Parameter	Symbol	Unit	min	typ	max	Measurement Conditions / Comments
Pulse Length	t_p	µs		10		This pulse regime is a generic operation mode. Please consult eagleyard if you need a different pulse mode.
Pulse Repetition Rate	RR	Hz		300		

© All rights reserved by eagleyard Photonics GmbH. This data sheet will be electronically administered and is subject to change without notice. Uncontrolled copy when printed.

EYP-BAL-0670-00004-1510-SOT23-0010

Revision 0.70

18.01.2017

MULTI MODE LASER DIODES
Broad Area Laser

Package Dimensions

Parameter	Symbol	Unit	min	typ	max	Measurement Conditions / Comments
Height of Emission Plane	d_{EP}	mm		3.65		reference plane A: top side of TO header
Excentricity of Emission Center	R	mm			0.12	reference B: center of outer diameter of header
Pin Length	l	mm		14.0		

Package Pinout

1	Laser Diode Anode, Case
2	not connected
3	Laser Diode Cathode

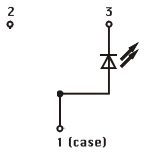

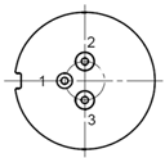

Package Drawings

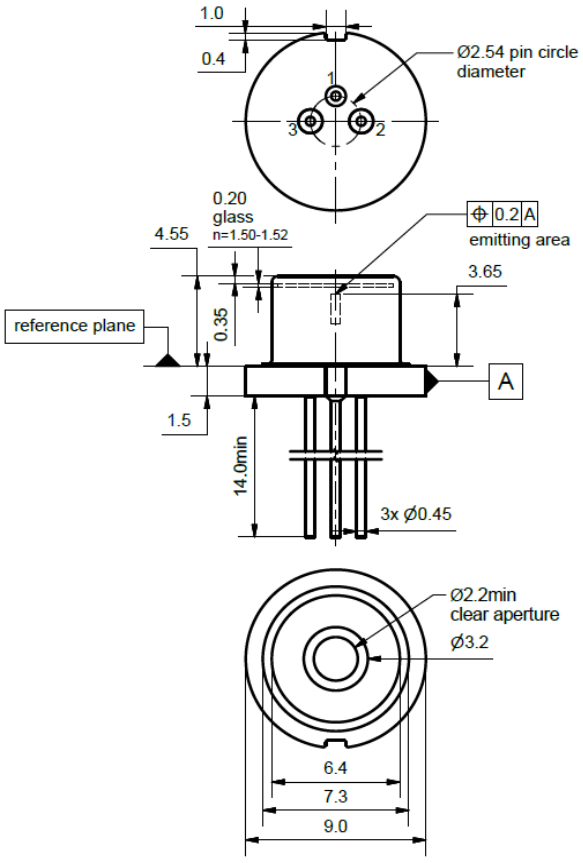

AIZ-16-0421-1517



© All rights reserved by eagleyard Photonics GmbH. This data sheet will be electronically administered and is subject to change without notice. Uncontrolled copy when printed.

EYP-BAL-0670-00004-1510-SOT23-0010

Revision 0.70

18.01.2017

MULTI MODE LASER DIODES
Broad Area Laser

Typical Measurement Results

Spectrum

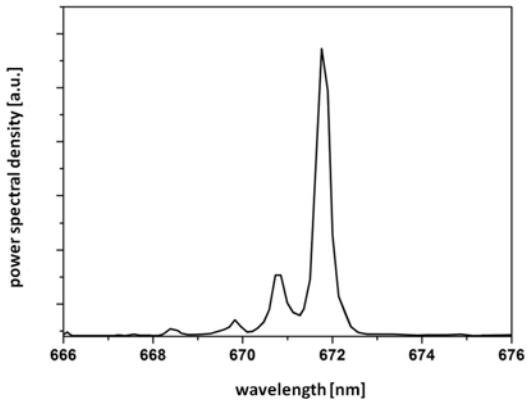

Performance figures, data and any illustrative material provided in this specification are typical and must be specifically confirmed in writing by eagleyard Photonics before they become applicable to any particular order or contract. In accordance with the eagleyard Photonics policy of continuous improvement specifications may change without notice.

Unpacking, Installation and Laser Safety

Unpacking the laser diodes should only be done at electrostatic safe workstations (EPA). Though protection against electro static discharge (ESD) is implemented in the laser package, charges may occur at surfaces. Please store this product in its original package at a dry, clean place until final use. During device installation, ESD protection has to be maintained.



Laser Emission



The BAL diode type is known to be sensitive against thermal stress. Operating at moderate temperatures on propper heat sinks willl contribute to a long lifetime of the diode.



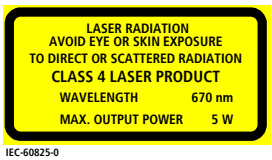

Avoid direct and/or indirect exposure to the free running beam. Collimating the free running beam with optics as common in optical instruments will increase threat to the human eye.

Each laser diode will come with an individual test protocol verifying the parameters given in this document.





Distributor
amsTECHNOLOGIES
where technologies meet solutions
info@amstechnologies.com
www.amstechnologies-webshop.com
Contact us

DATA SHEET

EYP-BAL-0670-00010-1510-SOT23-0016

Revision 0.70

18.01.2017

MULTI MODE LASER DIODES
Broad Area Laser

General Product Information

Product	Application
670 nm Broad Area Laser	Sensing
for Pulse Mode Operation	
sealed TO Housing	



Absolute Maximum Ratings

Parameter	Symbol	Unit	min	typ	max	Measurement Conditions / Comments
Storage Temperature	T_S	°C	-40		85	Every condition of the Absolute Maximum Ratings has to be kept during operation
Operational Temperature at Case	T_C	°C	-20		70	
Peak Current	$I_{F\ Peak}$	A			16	see Pulse Mode Conditions
Reverse Voltage	V_R	V			2	
Peak Output Power	$P_{opt\ Peak}$	W			11	see Pulse Mode Conditions
Forward Voltage at Peak	V_F	V			3	see Pulse Mode Conditions

Recommended Operational Conditions

Parameter	Symbol	Unit	min	typ	max	Measurement Conditions / Comments
Operational Temperature at Case	T_C	°C	15		40	
Forward Current	$I_{F\ Peak}$	A			14.5	see Pulse Mode Conditions
Output Power	$P_{opt\ Peak}$	W		10		see Pulse Mode Conditions

Characteristics at 25° C at Begin Of Life

Parameter	Symbol	Unit	min	typ	max	Measurement Conditions / Comments
Center Wavelength	λ_C	nm	650	670	690	see Pulse Mode Conditions
Spectral Width (FWHM)	$\Delta\lambda$	nm		5		
Temperature Coefficient of Wavelength	$d\lambda / dT$	nm / K		0.3		
Peak Output Power @ I_F = 14.5 A	$P_{opt\ Peak}$	W		10		see Pulse Mode Conditions
Threshold Current	I_{th}	A		0.7		
Differential Series Resistance	R_S	Ω		0.1		
Cavity Length	L	µm		1500		
Stripe width	Ws	µm		100		

Distributor
amsTECHNOLOGIES
where technologies meet solutions
info@amstechnologies.com
www.amstechnologies-webshop.com
Contact us

EYP-BAL-0670-00010-1510-SOT23-0016

Revision 0.70

18.01.2017

MULTI MODE LASER DIODES
Broad Area Laser

Characteristics at 25° C at Begin Of Life cont'd

Parameter	Symbol	Unit	min	typ	max	Measurement Conditions / Comments
Divergence parallel (FWHM)	$\Theta_{\parallel}$	°	5	10	13	
Divergence perpendicular (FWHM)	$\Theta_{\perp}$	°	25	30	35	
Polarization				TE		E field parallel to Pin 2 - Pin 3 - plane
Spectral Mode (longitudinal)				Multi Mode		

Pulse Mode Conditions

Parameter	Symbol	Unit	min	typ	max	Measurement Conditions / Comments
Pulse Length	t_p	µs		1		
Pulse Repetition Rate	RR	kHz		3.3		
Number of Pulses	N_P			3.5×10^9		

© All rights reserved by eagleyard Photonics GmbH. This data sheet will be electronically administered and is subject to change without notice. Uncontrolled copy when printed.

EYP-BAL-0670-00010-1510-SOT23-0016

Revision 0.70

18.01.2017

MULTI MODE LASER DIODES
Broad Area Laser

Package Dimensions

Parameter	Symbol	Unit	min	typ	max	Measurement Conditions / Comments
Height of Emission Plane	d_{EP}	mm		3.65		reference plane A: top side of TO header
Excentricity of Emission Center	R	mm			0.12	reference B: center of outer diameter of header
Pin Length	l	mm		14.0		

Package Pinout

1	Laser Diode Anode, Case
2	not connected
3	Laser Diode Cathode

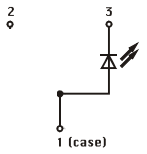

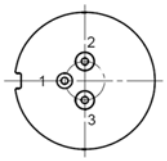

Package Drawings

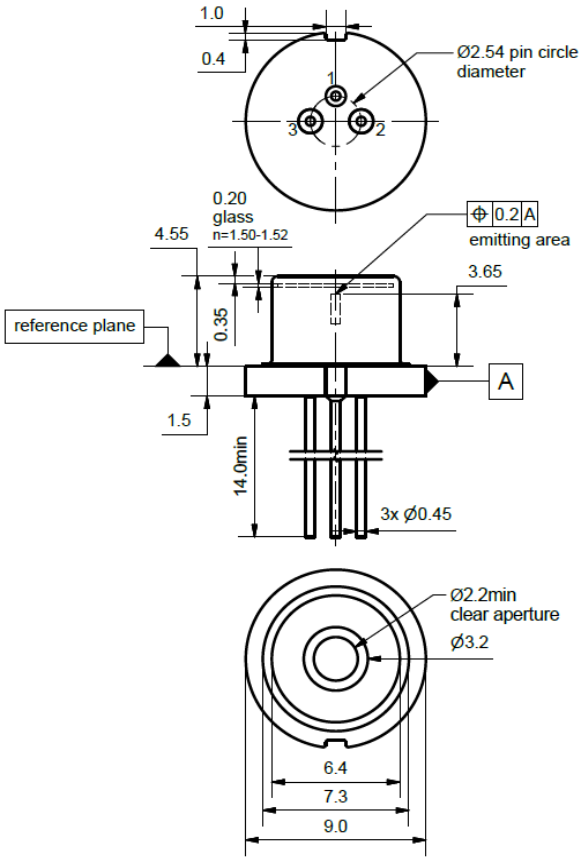

AIZ-16-0421-1517



© All rights reserved by eagleyard Photonics GmbH. This data sheet will be electronically administered and is subject to change without notice. Uncontrolled copy when printed.

EYP-BAL-0670-00010-1510-SOT23-0016

Revision 0.70

18.01.2017

MULTI MODE LASER DIODES
Broad Area Laser

Typical Measurement Results

Spectrum

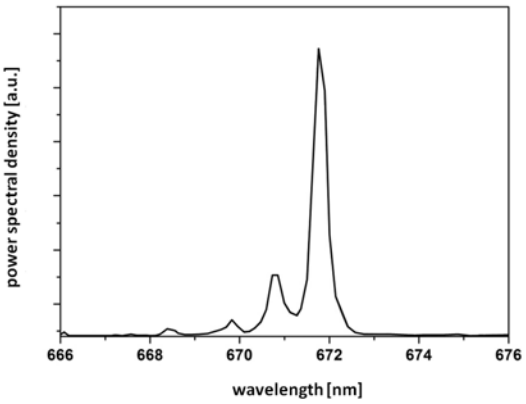

Performance figures, data and any illustrative material provided in this specification are typical and must be specifically confirmed in writing by eagleyard Photonics before they become applicable to any particular order or contract. In accordance with the eagleyard Photonics policy of continuous improvement specifications may change without notice.

Unpacking, Installation and Laser Safety

Unpacking the laser diodes should only be done at electrostatic safe workstations (EPA). Though protection against electro static discharge (ESD) is implemented in the laser package, charges may occur at surfaces. Please store this product in its original package at a dry, clean place until final use. During device installation, ESD protection has to be maintained.



Laser Emission



The BAL diode type is known to be sensitive against thermal stress. Operating at moderate temperatures on propper heat sinks willl contribute to a long lifetime of the diode.



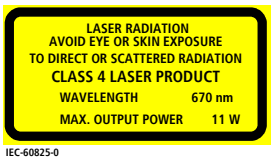

Avoid direct and/or indirect exposure to the free running beam. Collimating the free running beam with optics as common in optical instruments will increase threat to the human eye.

Each laser diode will come with an individual test protocol verifying the parameters given in this document.





Distributor
amsTECHNOLOGIES
where technologies meet solutions
info@amstechnologies.com
www.amstechnologies-webshop.com
Contact us

© All rights reserved by eagleyard Photonics GmbH. This data sheet will be electronically administered and is subject to change without notice. Uncontrolled copy when printed.

DATA SHEET

EYP-BAL-0760-00008-2020-SOT23-0016

Revision 0.90

18.11.2021

MULTI MODE LASER DIODES
Broad Area Laser

General Product Information

Product	Application
760 nm Broad Area Laser	Pulsed Material Processing
for High Energy Pulse Mode Operation	Medical
sealed TO Housing	



Absolute Maximum Ratings

Parameter	Symbol	Unit	min	typ	max	Measurement Conditions / Comments
Storage Temperature	T_S	°C	-40		85	Every condition of the Absolute Maximum Ratings has to be kept during operation
Operational Temperature at Case	T_C	°C	-40		70	
Peak Current	$I_{F\ Peak}$	A			10	see Pulse Mode Conditions
Reverse Voltage	V_R	V			2	
Peak Output Power	$P_{opt\ Peak}$	W			11	see Pulse Mode Conditions
Forward Voltage at Peak	V_F	V			3	see Pulse Mode Conditions

Recommended Operational Conditions

Parameter	Symbol	Unit	min	typ	max	Measurement Conditions / Comments
Operational Temperature at Case	T_C	°C	0		45	
Forward Current	$I_{F\ Peak}$	A			8	see Pulse Mode Conditions
Output Power	$P_{opt\ Peak}$	W	8			see Pulse Mode Conditions

Characteristics at 25° C at Begin Of Life

Parameter	Symbol	Unit	min	typ	max	Measurement Conditions / Comments
Center Wavelength	λ_C	nm	755	760	765	see Pulse Mode Conditions
Spectral Width (FWHM)	$\Delta\lambda$	nm		2	10	
Temperature Coefficient of Wavelength	$d\lambda / dT$	nm / K		0.2		
Peak Output Power @ I_F = 8 A	$P_{opt\ Peak}$	W	8			see Pulse Mode Conditions
Threshold Current	I_{th}	A		1.2		
Differential Series Resistance	R_S	Ω		0.14		

Distributor
amsTECHNOLOGIES
where technologies meet solutions
info@amstechnologies.com
www.amstechnologies-webshop.com
Contact us

EYP-BAL-0760-00008-2020-SOT23-0016

Revision 0.90

18.11.2021

MULTI MODE LASER DIODES
Broad Area Laser



Characteristics at 25° C at Begin Of Life cont'd

Parameter	Symbol	Unit	min	typ	max	Measurement Conditions / Comments
Emitter Cavity Length	L	µm		2000		
Stripe Width	W_S	µm		200		
Divergence parallel (FWHM)	$\Theta_{\parallel}$	°	6	8	12	
Divergence perpendicular (FWHM)	$\Theta_{\perp}$	°	25	27	35	
Polarization				TE		E field parallel to Pin 2 - Pin 3 plane
Spectral Mode (longitudinal)				Multi Mode		

Pulse Mode Conditions

Parameter	Symbol	Unit	min	typ	max	Measurement Conditions / Comments
Pulse Length	t_p	µs	5.9	6	6.1	
Pulse Repetition Rate	RR	kHz		25		
Burst Duration	t_{pp}	s		0.8		20.000 Pulses
Burst Repetition Rate		Hz		0.5		

This data sheet is subject to change without notice.
© eagleyard Photonics

EYP-BAL-0760-00008-2020-SOT23-0016

Revision 0.90

18.11.2021

MULTI MODE LASER DIODES
Broad Area Laser



Package Dimensions

Parameter	Symbol	Unit	min	typ	max	Measurement Conditions / Comments
Height of Emission Plane	d_{EP}	mm		3.83		reference plane B: top side of TO header
Excentricity of Emission Center	R	mm			0.12	reference A: center of outer diameter of header
Pin Length	l	mm		14.0		

Pin Assignment

1	Laser Diode Anode, Case
2	not connected
3	Laser Diode Cathode

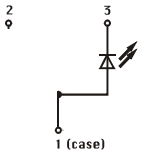

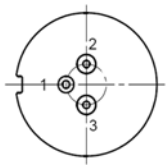

Package Drawings

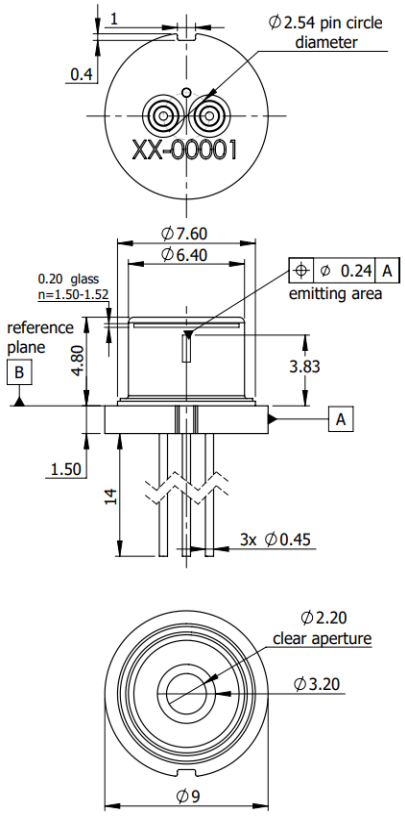

SWZ-20-0731-1538

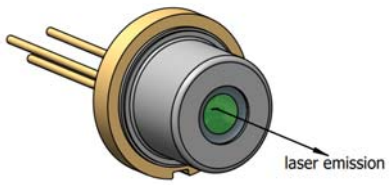

This data sheet is subject to change without notice.
© eagleyard Photonics

EYP-BAL-0760-00008-2020-SOT23-0016

Revision 0.90

18.11.2021

MULTI MODE LASER DIODES
Broad Area Laser

Typical Measurement Results

P-I-V curve

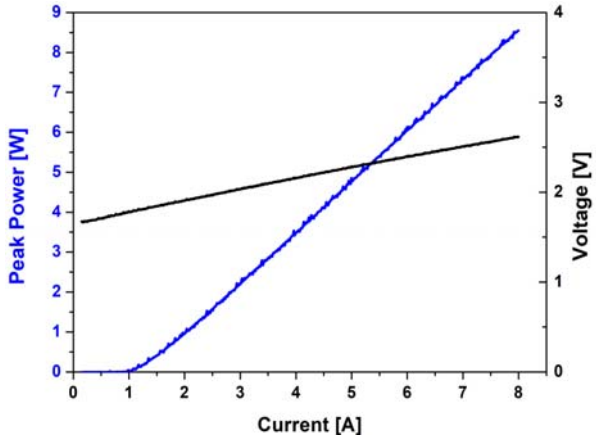

Spectrum

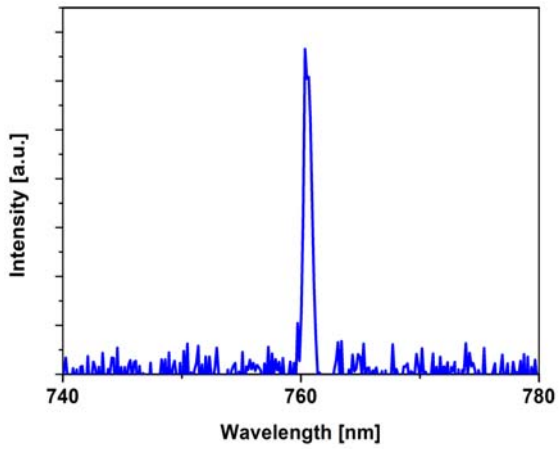

Burst Mode

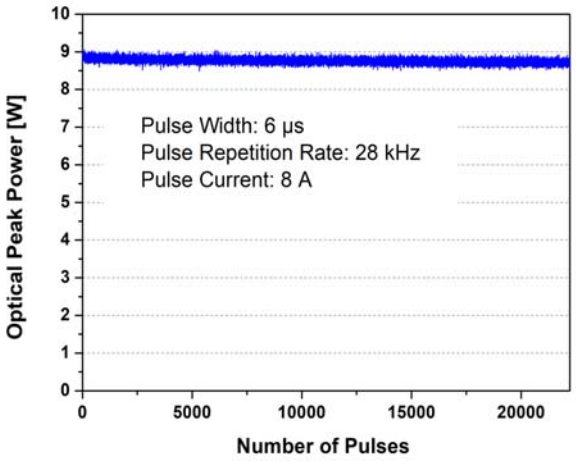

Performance figures, data and any illustrative material provided in this specification are typical and must be specifically confirmed in writing by eagleyard Photonics before they become applicable to any particular order or contract. In accordance with the eagleyard Photonics policy of continuous improvement specifications may change without notice.

This data sheet is subject to change without notice.
© eagleyard Photonics

EYP-BAL-0760-00008-2020-SOT23-0016

Revision 0.90

18.11.2021

MULTI MODE LASER DIODES
Broad Area Laser

Unpacking, Installation and Laser Safety

Unpacking the laser diodes should only be done at electrostatic safe workstations (EPA). Though protection against electro static discharge (ESD) is implemented in the laser package, charges may occur at surfaces. Please store this product in its original package at a dry, clean place until final use. During device installation, ESD protection has to be maintained.

hersta

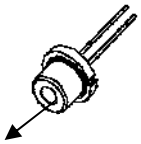

Laser Emission



The BAL diode type is known to be sensitive against thermal stress. Operating at moderate temperatures on propper heat sinks willl contribute to a long lifetime of the diode.



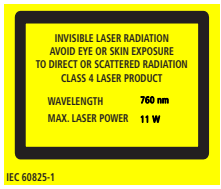

The laser emission from this diode is close to the invisible infrared region of the electromagnetic spectrum. Avoid direct and/or indirect exposure to the free running beam. Collimating the free running beam with optics as common in optical instruments will increase threat to the human eye.

Each laser diode will come with an individual test protocol verifying the parameters given in this document.





Complies with 21 CFR 1040.10 and 1040.40

Distributor
amsTECHNOLOGIES
where technologies meet solutions
info@amstechnologies.com
www.amstechnologies-webshop.com
Contact us

This data sheet is subject to change without notice.
© eagleyard Photonics